BP Series

MULTI-FIT TANKS

480mm x 650mm - 100L Capacity

OIL TANKS

BP Series tanks are manufactured using only high-quality raw materials combined with the latest technologies in robot welding and assembly. This results in a reliable product, sleek in appearance and suitable for a range of applications.

Available in aluminium or powder-coated steel, with L-brackets for side mounting or bottom brackets for rear-of-cab mounting

- 115mm filter provision for tank-top return filter and/or direct valve mounting
- Quality filler breather with replaceable element
- Oil-level indicator

TKBPS Side Mount

TKBPR Rear Mount

Capacity (L)	WITH SIDE-MOUNT BRACKET				WITH REAR-MOUNT BRACKET				A (mm)
	Aluminium		Steel		Aluminium		Steel		
	Product Code	Weight (kg)	Product Code	Weight (kg)	Product Code	Weight (kg)	Product Code	Weight (kg)	
100	TKBPS100A	30	TKBPS100S	41	TKBPR100A	29	TKBPR100S	40	350

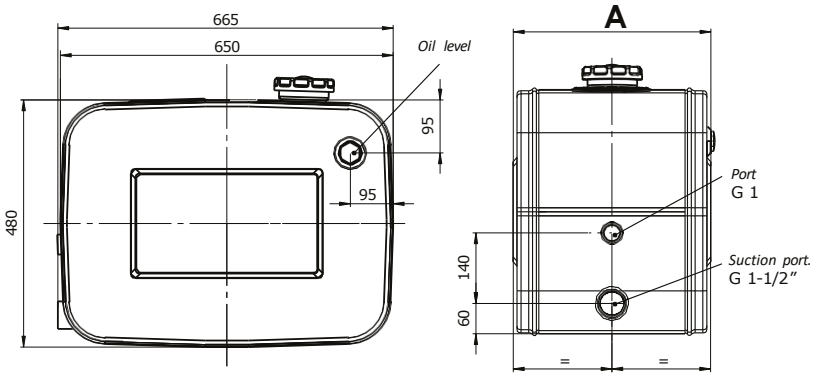

Tank Dimensions

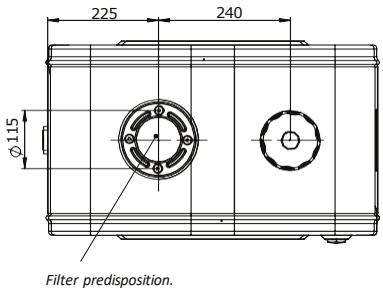

Side Mount

Rear Mount

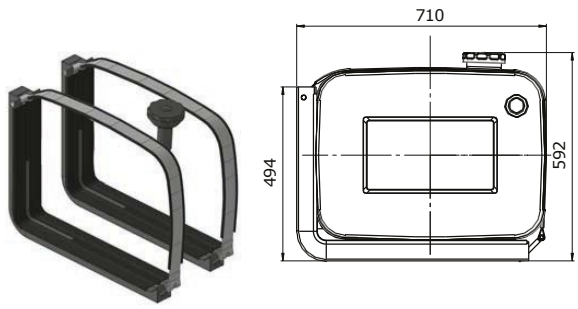

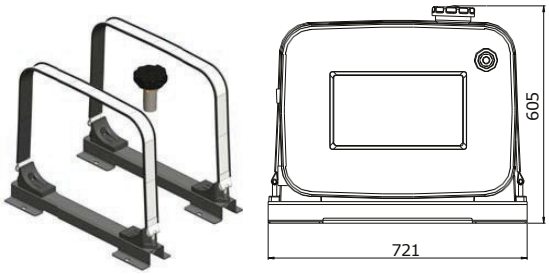

OMFB_Pacific_Oil_Tanks_&_Accessories_Range_REV6 27/02/2025

www.omfbpacific.com
OMFB Pacific Pty Ltd
Phone: +61 (0)3 9330 2694 Email: sales@omfbpacific.com

MULTI-FIT TANKS

640mm x 710mm - 135L to 250L Capacity

BR Series tanks are manufactured using only high-quality raw materials combined with the latest technologies in robot welding and assembly. This results in a reliable product, sleek in appearance and suitable for a range of applications.

Available in aluminium or powder-coated steel, with L-brackets for side mounting or bottom brackets for rear-of-cab mounting

- 115mm filter provision for tank-top return filter and/or direct valve mounting
- Quality filler breather with replaceable element
- Oil-level indicator

TKBRS Side Mount

TKBRR Rear Mount

Capacity (L)	WITH SIDE-MOUNT BRACKET				WITH REAR-MOUNT BRACKET				A (mm)
	Aluminium		Steel		Aluminium		Steel		
	Product Code	Weight (kg)	Product Code	Weight (kg)	Product Code	Weight (kg)	Product Code	Weight (kg)	
135	TKBRS135A	36	TKBRS135S	44	TKBRR135A	29	TKBRR135S	37	350
150	TKBRS150A	37	TKBRS150S	46	TKBRR150A	30	TKBRR150S	39	400
170	TKBRS170A	38	TKBRS170S	48	TKBRR170A	31	TKBRR170S	41	450
200	TKBRS200A	39	TKBRS200S	50	TKBRR200A	32	TKBRR200S	43	500
250	TKBRS250A	41	TKBRS250S	53	TKBRR250A	34	TKBRR250S	46	600

Tank Dimensions

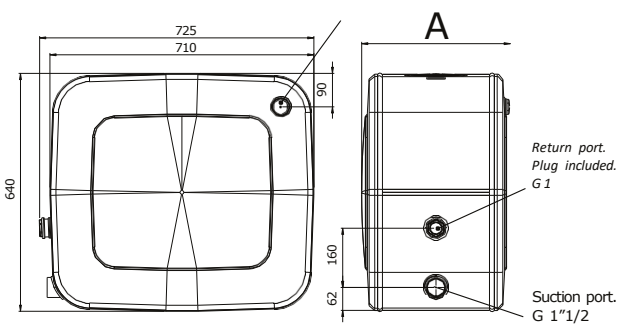

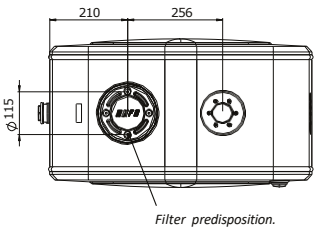

Side Mount

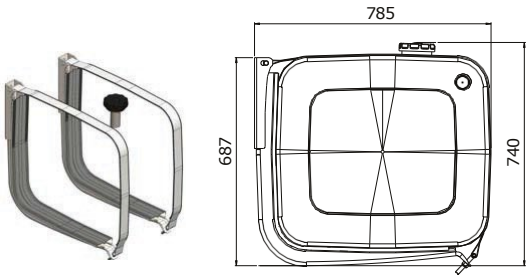

Rear Mount

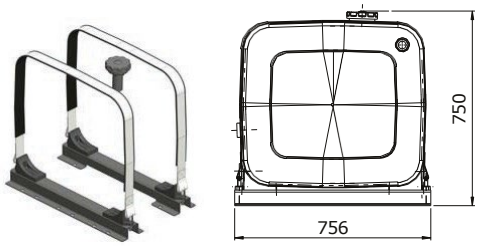

OMFB_Pacific_Oil_Tanks_&_Accessories_Range_REV6 27/02/2025

www.omfbpacific.com
OMFB Pacific Pty Ltd
Phone: +61 (0)3 9330 2694 Email: sales@omfbpacific.com

SLIMLINE SIDE-MOUNT TANKS

85L to 115L Capacity

M O N O Series tanks are manufactured using only high-quality raw materials combined with the latest technologies in robot welding and assembly. This results in a reliable product, sleek in appearance and suitable for a range of applications.

Available in aluminium or powder-coated steel, with single L-bracket for compact side mounting
- 115mm filter provision for tank-top return filter and/or direct valve mounting
- Quality filler breather with replaceable element
- Oil-level indicator

Aluminium

Steel

Capacity (L)	Aluminium		Steel		A (mm)	B (mm)
	Product Code	Weight (kg)	Product Code	Weight (kg)		
85	TKMON085A	33	TKMON085S	34	650	480
115	TKMON115A	39	TKMON115S	47	650	650

Tank Dimensions

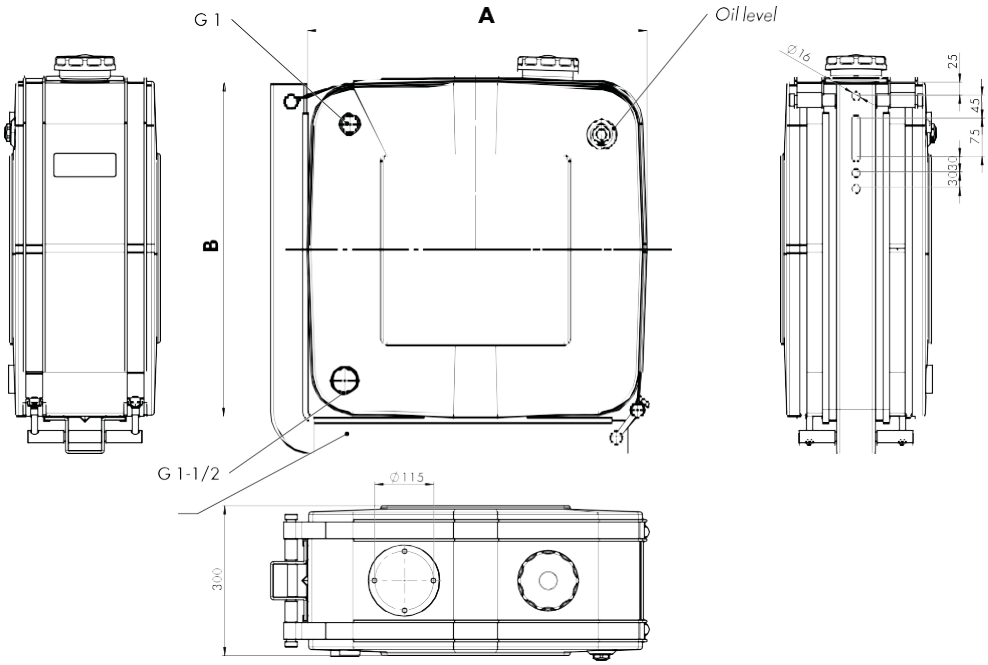

www.omfbpacific.com
OMFB Pacific Pty Ltd
Phone: +61 (0)3 9330 2694 Email: sales@omfbpacific.com

MONO Series

SLT SIDE-MOUNT TANKS

100L to 400L Capacity

OIL TANKS

SLT Series tanks are characterized by a particular TRAPEZOIDAL shape specifically studied for being easily and quickly installed on every type of vehicle that should complete particularly binding and heavy missions and under extreme climatic conditions. The trapezoidal profile, the technical features and the specific positioning of the components are studied for optimizing its employment as well as to reduce the maintenance time, maximizing therefore the operational surrender of the "system" vehicle.

- 115mm filter provision for tank-top return filter and/or direct valve mounting
- Available in aluminium or coated steel, with double L-brackets for side mounting
- Filter provision for tank-top return filter
- Quality filler breather with replaceable element
- Oil-level indicator

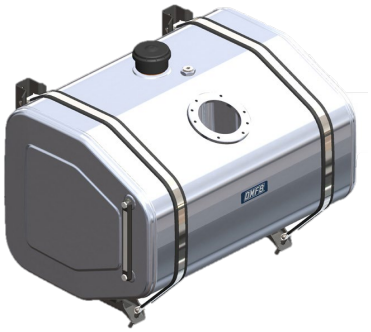

Capacity (L)	Aluminium		Steel		A (mm)
	Product Code	Weight (kg)	Product Code	Weight (kg)	
100	TKSLT100A	35	TKSLT100S	47	376
120	TKSLT120A	36.3	TKSLT120S	49.6	446
140	TKSLT140A	37.1	TKSLT140S	51.4	506
150	TKSLT150A	37.7	TKSLT150S	52.6	546
200	TKSLT200A	41.5	TKSLT200S	60.3	726
250	TKSLT250A	44	TKSLT250S	65.5	906
300	TKSLT300A	48	TKSLT300S	74.4	1076
400	TKSLT400A	49	TKSLT400S	86	1476

Tank Dimensions

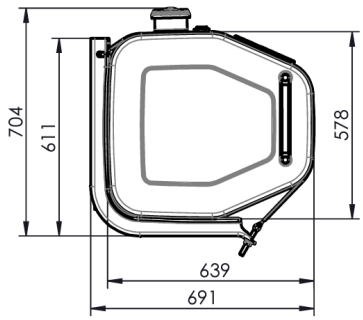

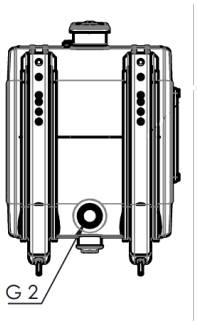

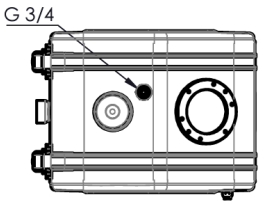

Filter Plate Details

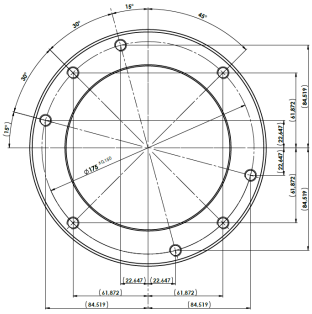

OMFB_Pacific_Oil_Tanks_&_Accessories_Range_REV6 27/02/2025

www.omfbpacific.com
OMFB Pacific Pty Ltd
Phone: +61 (0)3 9330 2694 Email: sales@omfbpacific.com

VERTICAL Series

REAR-OF-CAB TANKS

280mm x 645mm - 70L to 105L Capacity

OIL TANKS

VERTICAL Series tanks are manufactured using only high-quality raw materials combined with the latest technologies in robot welding and assembly. This results in a reliable product, sleek in appearance and suitable for a range of applications.

Available in aluminium or powder-coated steel, with bottom brackets for rear-of-cab mounting
- 115mm filter provision for tank-top return filter and/or direct valve mounting
- Quality filler breather with replaceable element
- Oil-level indicator

Aluminium

Steel

Capacity (L)	Aluminium		Steel		A (mm)	B (mm)
	Product Code	Weight (kg)	Product Code	Weight (kg)		
70	TKVER070A	10	TKVER070S	20	450	338
105	TKVER105A	12	TKVER105S	25	650	538

Tank Dimensions

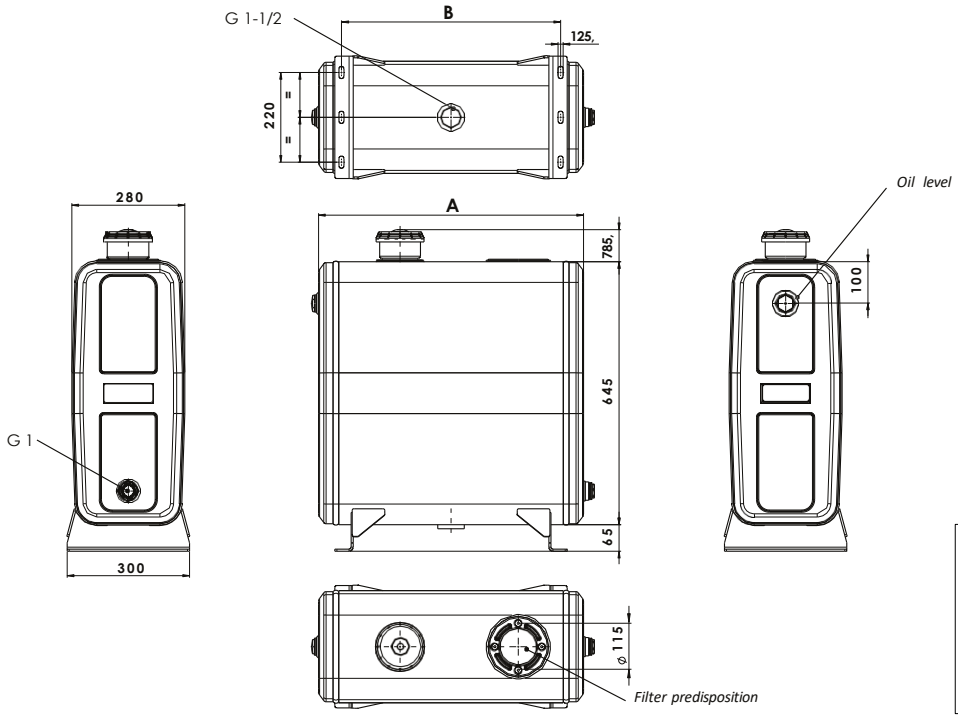

Accessories Available:

13590101290:
ANI-VIBRATION KIT

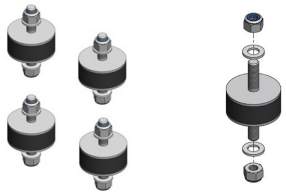

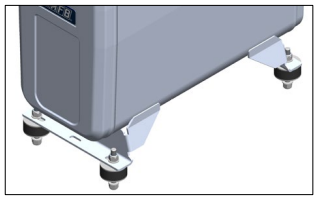

OMFB_Pacific_Oil_Tanks_&_Accessories_Range_REV6 27/02/2025

www.omfbpacific.com
OMFB Pacific Pty Ltd
Phone: +61 (0)3 9330 2694 Email: sales@omfbpacific.com

VERTICAL Series

REAR-OF-CAB TANKS

280mm x 645mm - 130L to 230L Capacity

OIL TANKS

VERTICAL Series tanks are manufactured using only high-quality raw materials combined with the latest technologies in robot welding and assembly. This results in a reliable product, sleek in appearance and suitable for a range of applications.

Available in aluminium or powder-coated steel, with bottom brackets for rear-of-cab mounting
- 115mm filter provision for tank-top return filter and/or direct valve mounting
- Quality filler breather with replaceable element
- Oil-level indicator

Aluminium

Steel

Capacity (L)	Aluminium		Steel		A (mm)	B (mm) Recommended
	Product Code	Weight (kg)	Product Code	Weight (kg)		
130	TKVER130A	24	TKVER130S	39	800	665
160	TKVER160A	27	TKVER160S	44	1000	760
200	TKVER200A	30	TKVER200S	49	1250	980
230	TKVER230A	32	TKVER230S	54	1450	740

Tank Dimensions

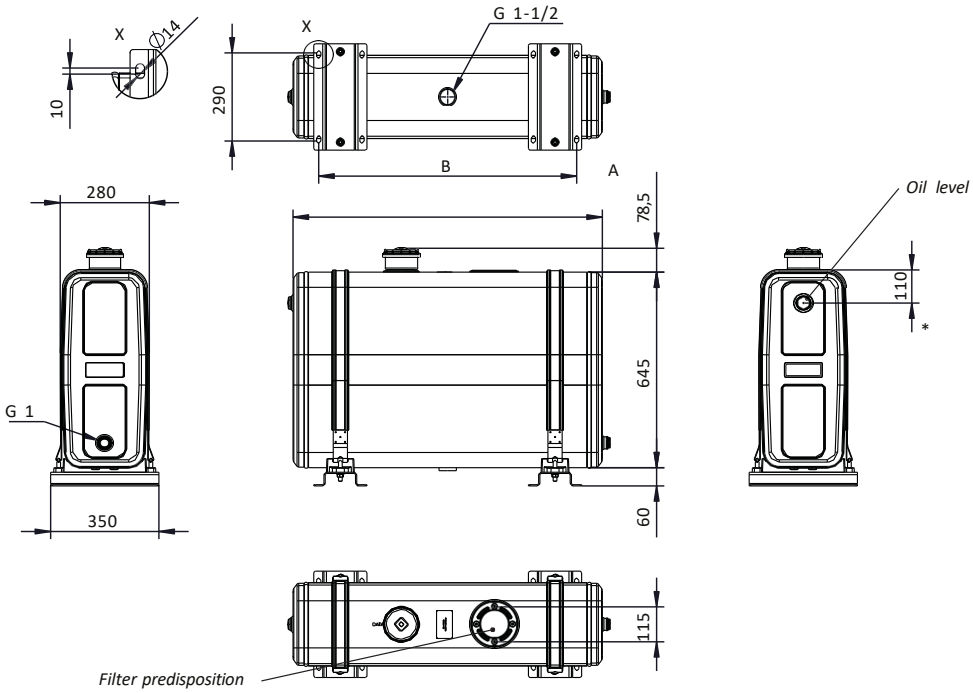

Accessories Available:

13590101012:
MOUNTING BRACKET VERTICAL TANK

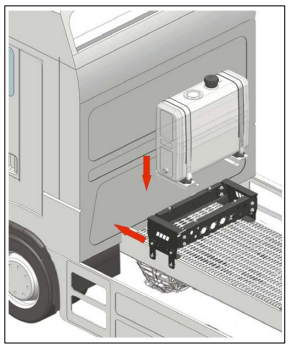

www.omfbpacific.com
OMFB Pacific Pty Ltd
Phone: +61 (0)3 9330 2694 Email: sales@omfbpacific.com

VERTICAL Series

REAR-OF-CAB SLIM TANKS

200mm x 850mm - 150L to 250L Capacity

OIL TANKS

VERTICAL SLIM Series tanks are manufactured using only high-quality raw materials combined with the latest technologies in robot welding and assembly. This results in a reliable product, sleek in appearance and suitable for a range of applications.

- Dedicated Mounting Kit: optimizes the footprint behind the cab for an easy installation.
- Additional G1 Connection Ports: conveniently located on both side walls.
- G2 Suction Ports: positioned underneath to save width space.
- Side Level Indicator: standard 254mm side level indicator included.
- Additional Port for electric level sensor

Aluminium

Steel

Capacity (L)	Aluminium		Steel		A (mm)
	Product Code	Weight (kg)	Product Code	Weight (kg)	
150	TKVRS150A	48.0	TKVRS150S	67.5	1000
180	TKVRS180A	50.5	TKVRS180S	73.0	1200
200	TKVRS200A	52.5	TKVRS200S	77.0	1350

Tank Dimensions

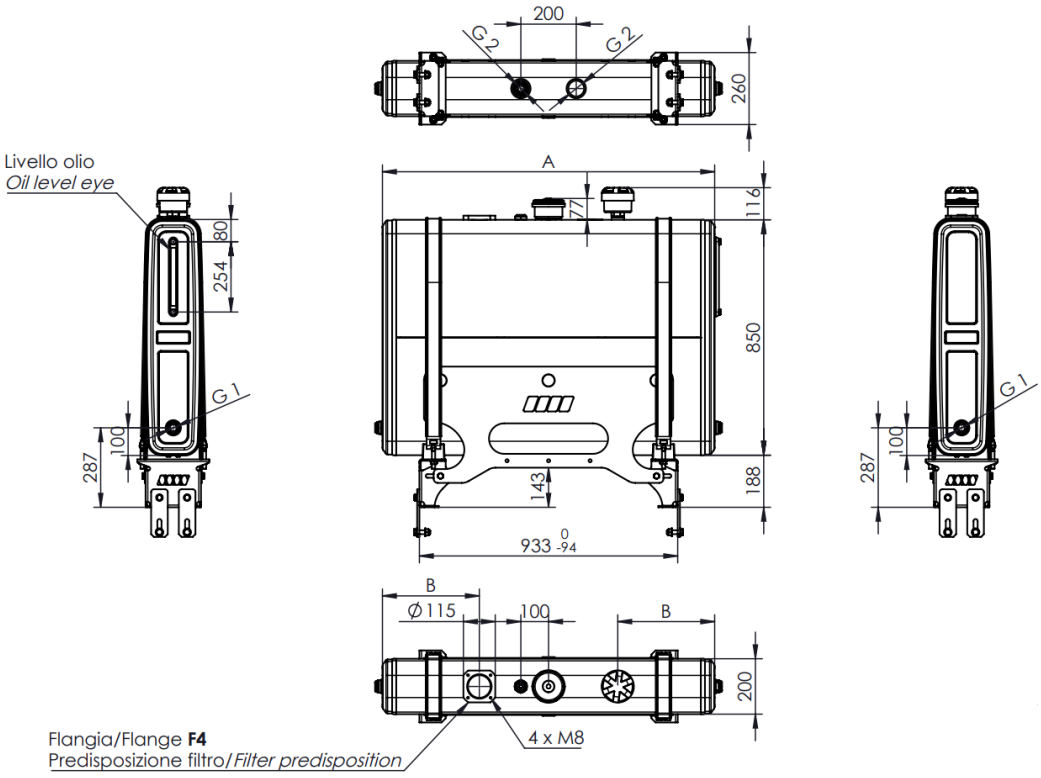

Accessories Available:

13590101218:
CONNECTION KIT FOR LOW FITTING
13590101227:
CONNECTION KIT FOR TOP FITTING

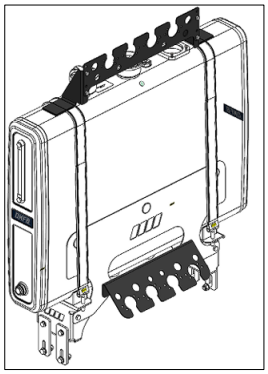

www.omfbpacific.com
OMFB Pacific Pty Ltd
Phone: +61 (0)3 9330 2694 Email: sales@omfbpacific.com

VERTICAL Series

REAR-OF-CAB SLIM TANKS

200mm x 850mm - 150L to 250L Capacity

OIL TANKS

VERTICAL SLIM Series tanks are manufactured using only high-quality raw materials combined with the latest technologies in robot welding and assembly. This results in a reliable product, sleek in appearance and suitable for a range of applications.

- Dedicated Mounting Kit: optimizes the footprint behind the cab for an easy installation.
- Additional G1 Connection Ports: conveniently located on both side walls.
- G2 Suction Ports: positioned underneath to save width space.
- Side Level Indicator: standard 254mm side level indicator included.
- Additional Port for electric level sensor
- Double filter provisions

Aluminium

Steel

Capacity (L)	Aluminium		Steel		A (mm)
	Product Code	Weight (kg)	Product Code	Weight (kg)	
250	TKVRS250A	56.0	TKVRS250S	85.0	1600

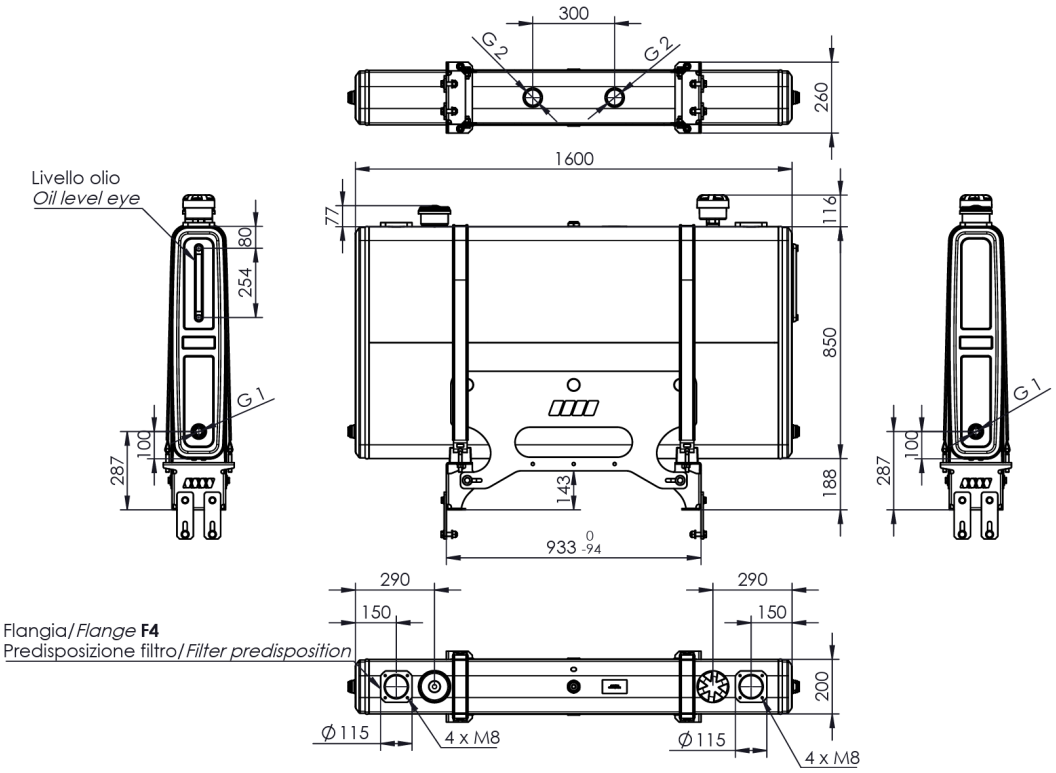

Tank Dimensions

Accessories Available:

13590101218:
CONNECTION KIT FOR LOW FITTING
13590101227:
CONNECTION KIT FOR TOP FITTING

13599020183:
F4 KIT FLANGE COVER F4
*Not included

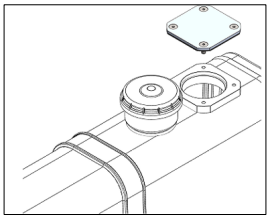

OMFB_Pacific_Oil_Tanks_&_Accessories_Range_REV6 27/02/2025

www.omfbpacific.com
OMFB Pacific Pty Ltd
Phone: +61 (0)3 9330 2694 Email: sales@omfbpacific.com

CHASSIS-MOUNT TANKS

21L to 60L Capacity

CH Series tanks are manufactured using only high-quality raw materials combined with the latest technologies in robot welding and assembly. This results in a reliable product, sleek in appearance and suitable for a range of applications.

Available in powder-coated steel with incorporated brackets for mounting inside or outside of chassis rails

- 115mm filter provision for tank-top return filter and/or direct valve mounting
- Quality filler breather with replaceable element
- Oil-level indicator

Filter ready

No filter

Capacity (L)	Filter Ready		No Filter	
	Product Code	Weight (kg)	Product Code	Weight (kg)
21	TKCHF021S	9	TKCHN021S	9.5
40	TKCHF040S	13.5	TKCHN040S	14
60	TKCHF060S	16.5	TKCHN060S	17

www.omfbpacific.com
OMFB Pacific Pty Ltd
Phone: +61 (0)3 9330 2694 Email: sales@omfbpacific.com

CHASSIS-MOUNT TANKS

TKCHF021S

TKCHF040S

TKCHF060S

Tank Dimensions

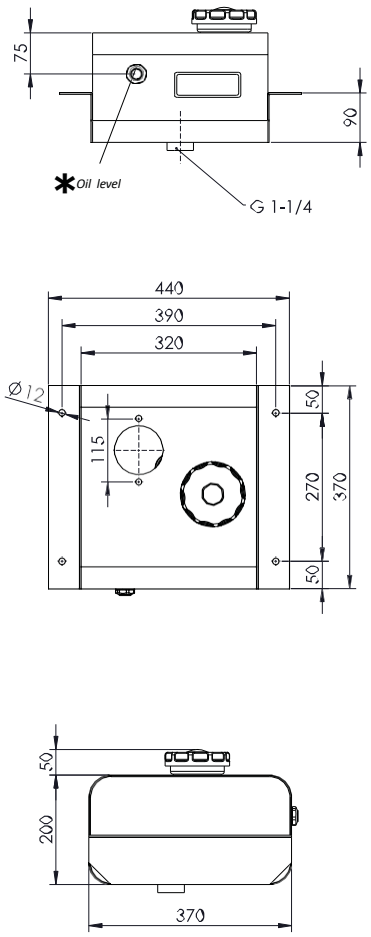

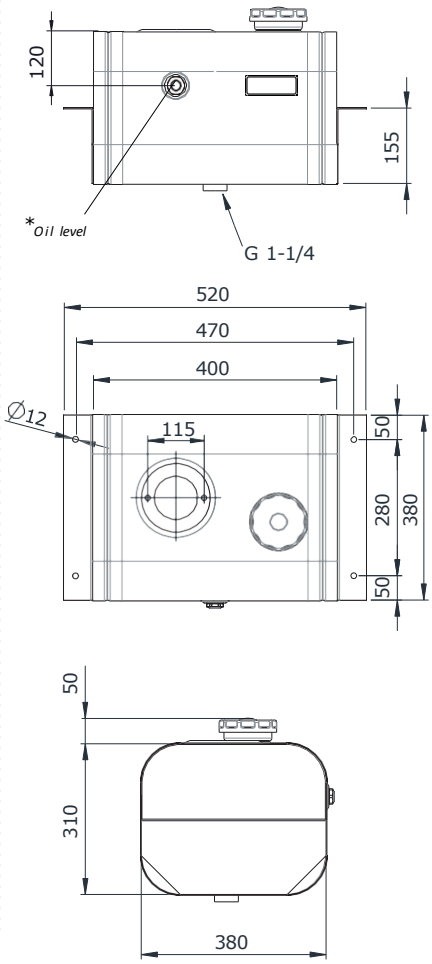

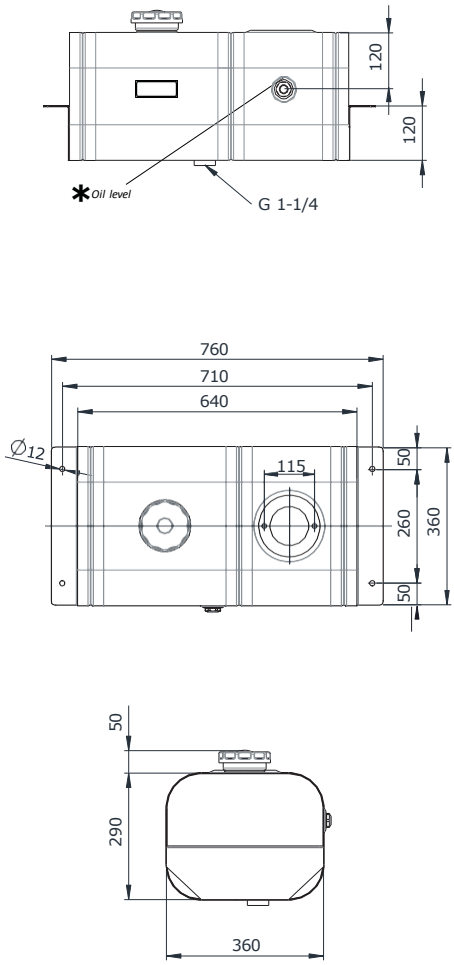

OMFB_Pacific_Oil_Tanks_&_Accessories_Range_REV6 27/02/2025

VALVE-MOUNT TANKS
15L to 30L Capacity

TIP Series tanks are manufactured using only high-quality raw materials combined with the latest technologies in robot welding and assembly. This results in a reliable product ideal for small tipper applications.

- Available in powder-coated steel with incorporated brackets for mounting inside or outside of chassis rails
- Ready for direct mounting of tipper-valve to eliminate the need for valve bracket and return line
- Cable, electric and pneumatic tipper-valve options available (not included with tank)
- Including vertical oil level gauge with metal casing

(Valve not included)

Capacity (L)	Product Code	Weight (kg)
15	TKSVM015S	6.5
30	TKSVM030S	12

TKSVM015S

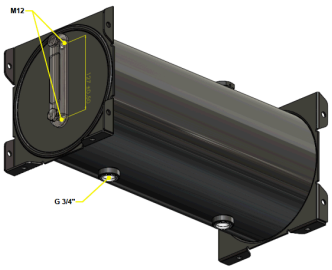

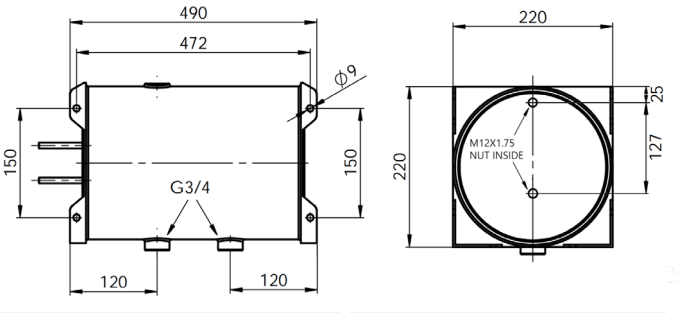

OIL LEVEL INDICATOR

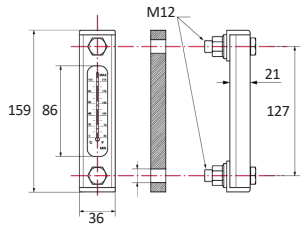

TKSVM030S

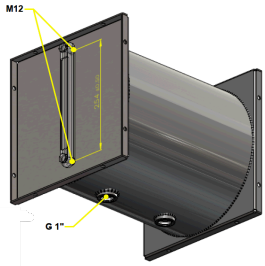

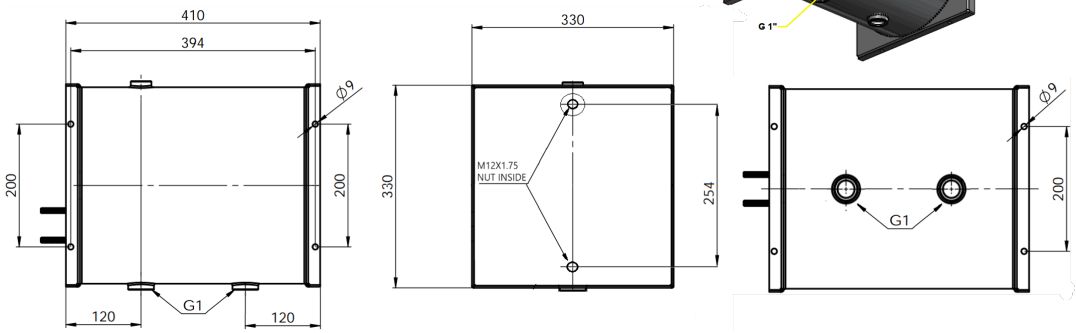

OIL LEVEL INDICATOR

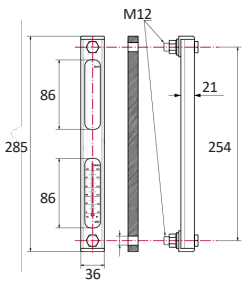

OMFB_Pacific_Oil_Tanks_&_Accessories_Range_REV6 27/02/2025

www.omfbpacific.com
OMFB Pacific Pty Ltd
Phone: +61 (0)3 9330 2694 Email: sales@omfbpacific.com

RETURN FILTERS
For Oil Tanks

A selection of return filters is available, designed to suit the OMFB oil tank range.
More options available on request.

F4 FLANGE FILTERS - 115mm PCD 2 Holes

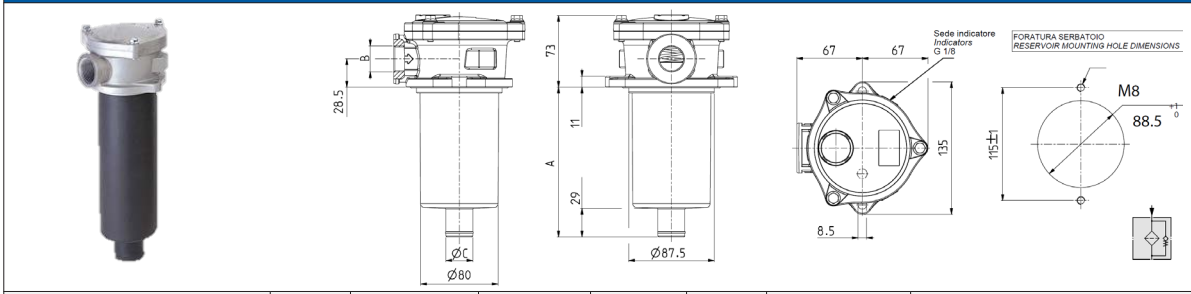

Assembly Part Number	β	Displacement (L/min)	A (mm)	B (BSPP)	C (mm)	Cartridge Part Number	Cartridge Description
11800102409	β25>2	100	154	G 1	27.5	11800202408	Reinforced cellulose 25 µm
11800102436		160	237	G 1	40	11800212175	Reinforced cellulose 25 µm
11800102454		175	317	B 1 1/4	40	11800202453	Reinforced cellulose 25 µm
11800103408		75	154	G 1	27.5	11800203407	Reinforced cellulose 10 µm
11800103453	β10>2	135	317	G 1	40	11800203452	Reinforced cellulose 10 µm
11890200170	SEAL KIT						

F4 FLANGE FILTERS - 115mm PCD 2 + 4 Holes

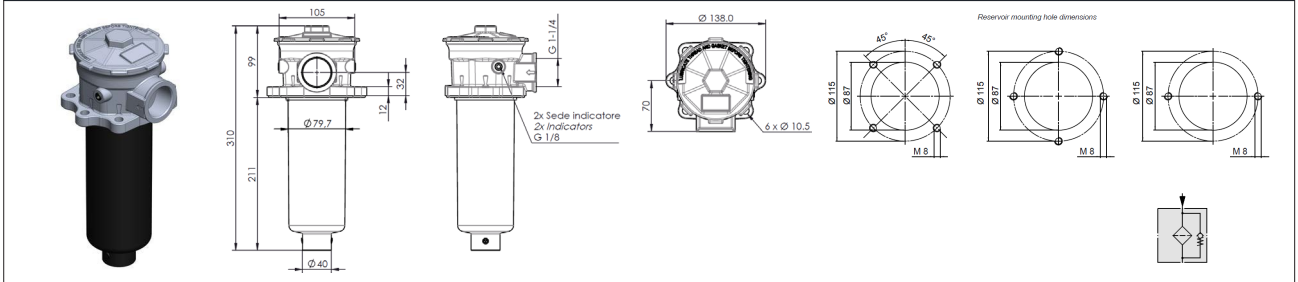

Assembly Part Number	β	Displacement (L/min)	A (mm)	B (BSPP)	C (mm)	Cartridge Part Number	Cartridge Description
11800104904	β25>200	130	211	G 1 1/4	40	11800204904	Micro-fibre glass 25 µm
11800103677	β10>2	170	211	G 1 1/4	40	11800203677	Reinforced cellulose 10 µm
11890200241	SEAL KIT						

KIT **11891200016** (not included)
Flanged Filter Mounting Kit 2x115

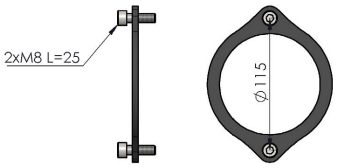

OMFB_Pacific_Oil_Tanks_&_Accessories_Range_REV6 27/02/2025

www.omfbpacific.com
OMFB Pacific Pty Ltd
Phone: +61 (0)3 9330 2694 Email: sales@omfbpacific.com

RETURN FILTERS
For Oil Tanks

A selection of return filters is available, designed to suit the OMFB oil tank range.
More options available on request.

F4 FLANGE FILTERS - 115mm PCD 4 Holes

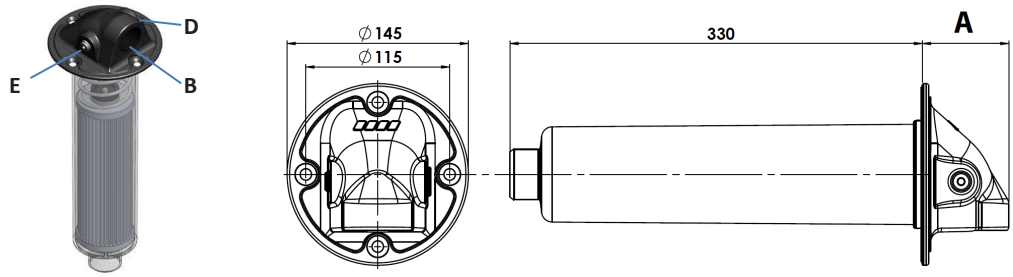

Assembly Part Number	Displacement (L/min)	A (mm)	B (BSPP)	D (BSPP)	E (BSPP)	Cartridge Part Number	Cartridge Description
11800120201	200	69	G 1 1/4	G 1/2	G 1/2	11800211176	60 µm steel 200 lt
11800120247	160	69				11800212219	10 µm cellulose 160 lt
11800120194	160	69				11800212175	25 µm cellulosa 160 lt

F4 FLANGE FILTERS SWIVEL - 115mm PCD 4 Holes
With Orientable G1 return port

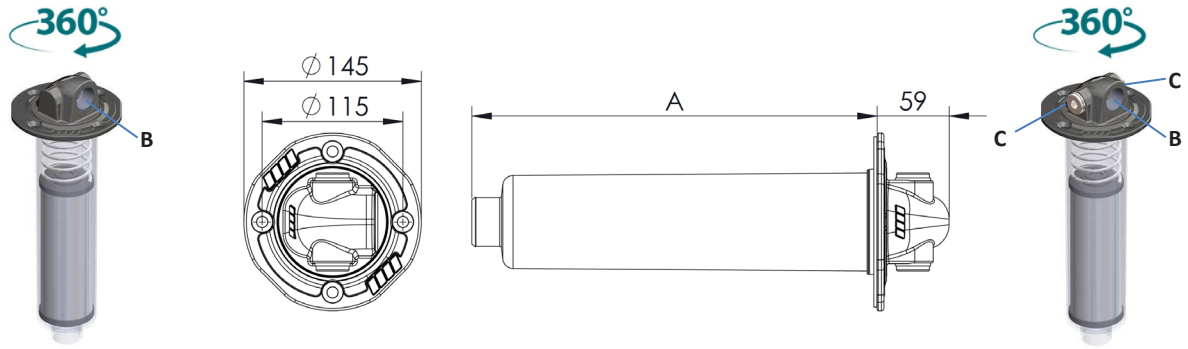

Assembly Part Number	Displacement (L/min)	A (mm)	B (BSPP)	C (BSPP)	Cartridge Part Number	Cartridge Description
11800125519	200	330	G 1	NA	1180021176	60 µm steel 200 lt
11800125528	160				11800212175	25 µm cellulose 160 lt
11800125715	90	165			11800201356	60 µm steel 90 lt
11800125724	60				11800202355	25 µm cellulose 60 lt
11800125546	200	330		G 1/2	11800211176	60 µm steel 200 lt
11800125555	160				11800212175	25 µm cellulose 160 lt
11800125742	90	165			11800201356	60 µm steel 90 lt
11800125751	60				11800202355	25 µm cellulose 60 lt

KIT **11891200016** (not included)
Flanged Filter Mounting Kit Plastic

www.omfbpacific.com
OMFB Pacific Pty Ltd
Phone: +61 (0)3 9330 2694 Email: sales@omfbpacific.com

FILLER CAPS
For Oil Tanks

Filler cap complete with paper filter to ensure a proper filtration on the air coming into the tank.
More options available on request.

FILLER CAP

11801300103

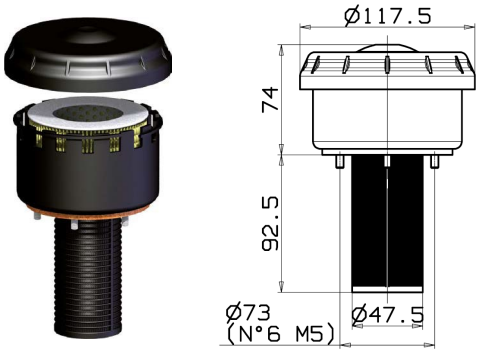

11801300201

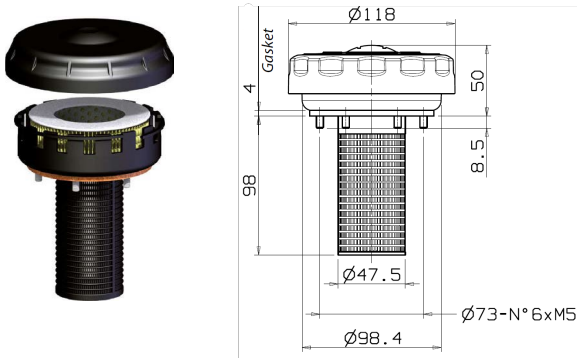

Assembly Part Number	Air Displacement (L/min)	Filter	Filter Element	Filter Element Material
11801300103	1800	3 µm	11890200107	Paper
11801300201	1400	10 µm	11890200125	Paper

FILLER CAP

11801301102

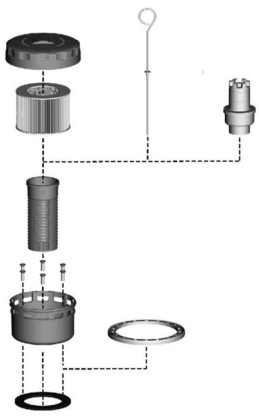

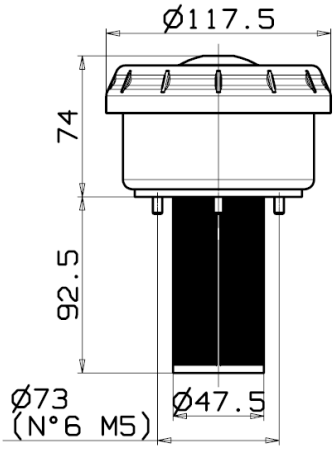

Assembly Part Number	Air Displacement (L/min)	Filter	Filter Element	Filter Element Material
11801301102	1800	3 µm	11890200107	Paper

www.omfbpacific.com
OMFB Pacific Pty Ltd
Phone: +61 (0)3 9330 2694 Email: sales@omfbpacific.com

BALL-VALVES
For Oil Tanks

A selection of standard and high-pressure ball valves is available, designed to suit the OMFB oil tank range.
More options available on request.

BALL VALES

Part Number	Size (gas)	A (mm)	Max. Working Pressure (bar)	Weight (kg)
12600500035	G 3/8	42	20	0.12
12600500044	G 1/2	49	20	0.16
12600500053	G 3/4	58	20	0.25
12600500062	G 1	68	20	0.43
12600500071	G 1-1/4	82	16	0.60
12600500080	G 1-1/2	89	16	0.93
12600500106	G 2	105	16	1.35

ORIENTABLE BALL VALES

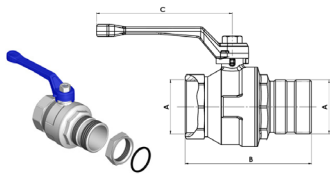

Part Number	Size - A (gas)	B (mm)	C (mm)	Max. Working Pressure (bar)	Weight (kg)
12600600356	G 1-1/4	89	133.5	16	0.70
12600600409	G 1-1/2	102	145.5	16	1.22
12600600507	G 2	137	150	16	1.80

HIGH-PRESSURE BALL VALVES

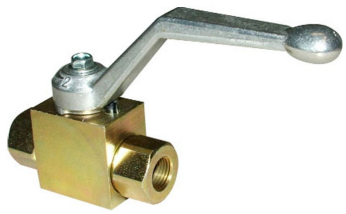

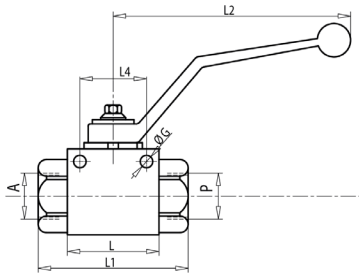

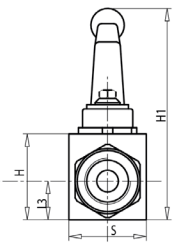

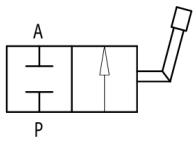

Part Number	Max. Pressure (bar)	Max. Flow (L/min)	A-P (gas)	L (mm)	L1 (mm)	L2 (mm)	L3 (mm)	L4 (mm)	ØG (mm)	H (mm)	H1 (mm)	S (mm)
12000200012	500	25	G 1/4	39.4	69	111	14.3	34	5.25	33	90	26
12000200021	500	38	G 3/8	41.8	71		15			35	92	30
12000200030	500	60	G 1/2	44.5	83		18.3	36		40	97	35
12000200049	400	100	G 3/4	62.5	95	180	29.5	50	6.25	57	106.5	49
12000200058	350	180	G 1	66.5	112					65	116.5	55

www.omfbpacific.com
OMFB Pacific Pty Ltd
Phone: +61 (0)3 9330 2694 Email: sales@omfbpacific.com

GENERAL ACCESSORIES
For Oil Tanks & Wet-Kits

Designed for installation on the rear of the prime mover, our swivel arm ensures smooth hose movement in sync with the semitrailer, eliminating the need for extra-fittings:

- Durable steel structure for maximum strength
- Black epoxy power coating for extra durability
- Integrated greaser for easy maintenance

A smart solution for improved hose management and reduced strain.

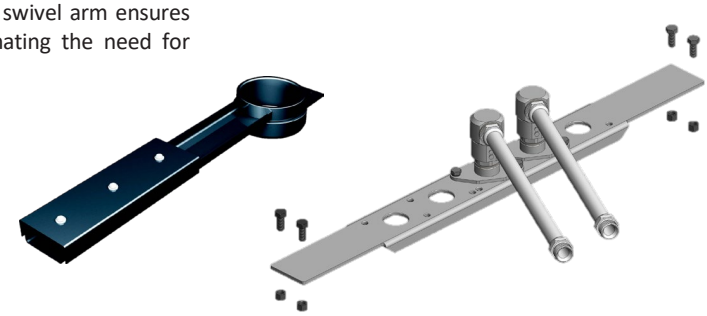

SWIVEL ARM
For Pipes Connection On Semitrailers

Part Number
12201500219

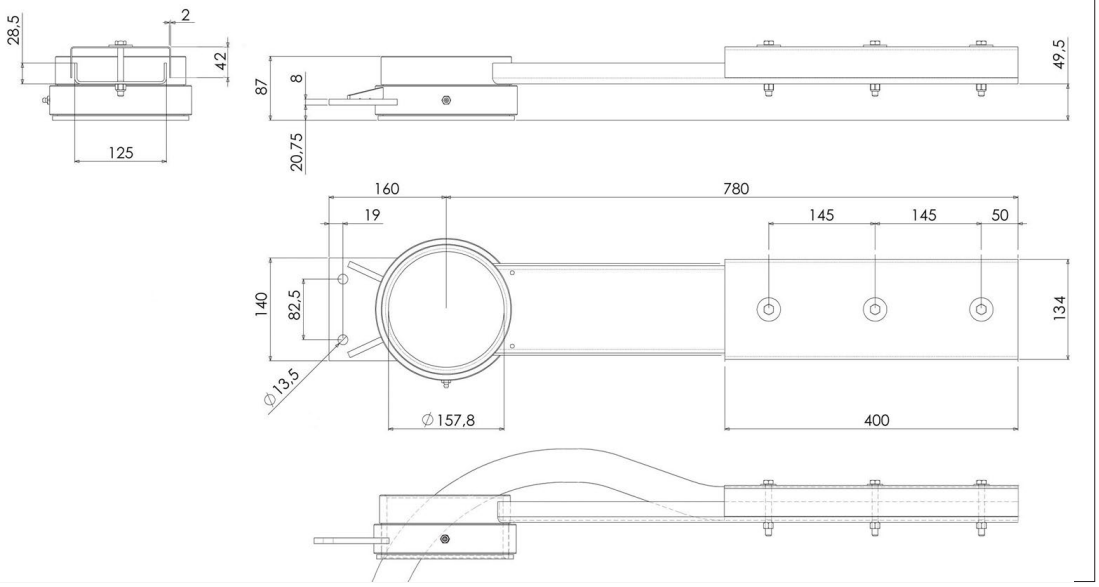

SUPPORT CROSSBAR FOR REVOLVING JOINTS
G 1 – G 3/4

Part Number	Joint Size (gas)
12201510020	**G 1**
12201510002	**G 3/4**

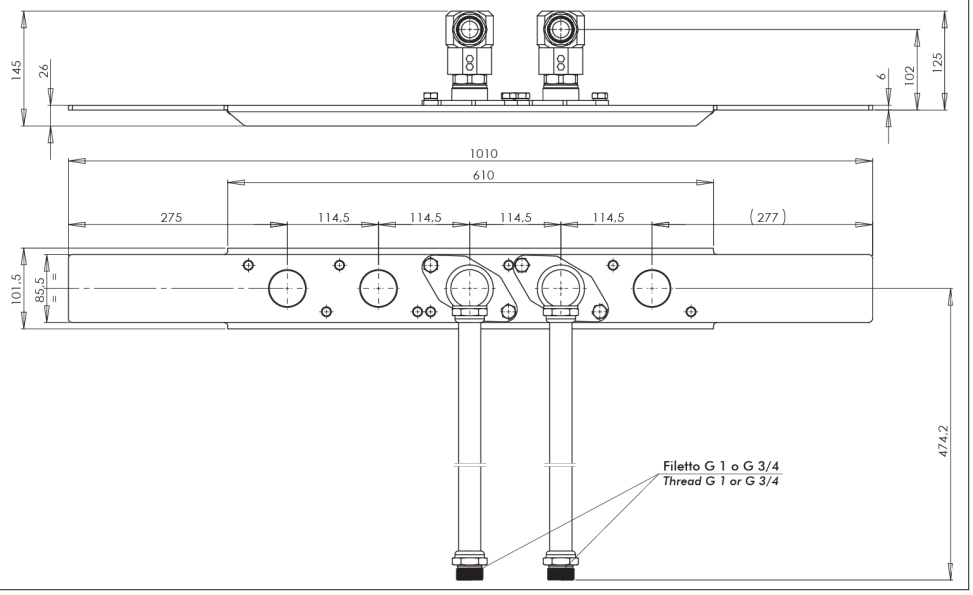

OMFB_Pacific_Oil_Tanks_&_Accessories_Range_REV6 27/02/2025

www.omfbpacific.com
OMFB Pacific Pty Ltd
Phone: +61 (0)3 9330 2694 Email: sales@omfbpacific.com

GENERAL ACCESSORIES
For Oil Tanks & Wet-Kits

Designed for installation on the rear of the tractor unit, our swivel arm ensures seamless hose movement, following the semitrailer's motions without the need for additional fittings.

- Durable steel structure for maximum strength
- Variable height (from 53 to 88mm)
- Grey RAL 7021 epoxy coating for superior protection
- Integrated greaser for effortless maintenance

A smart solution for improved hose management and reduced strain.

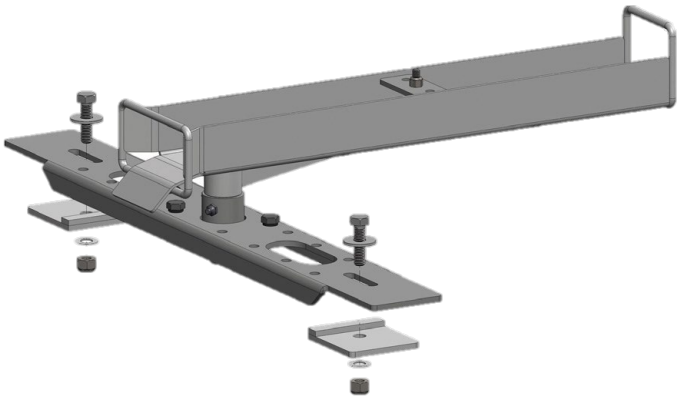

SWIVEL ARM
For Pipes Connection On Semitrailers

Part Number	Variable Height – X (mm)
12201500255	53
	63
	68
	73
	78
	88

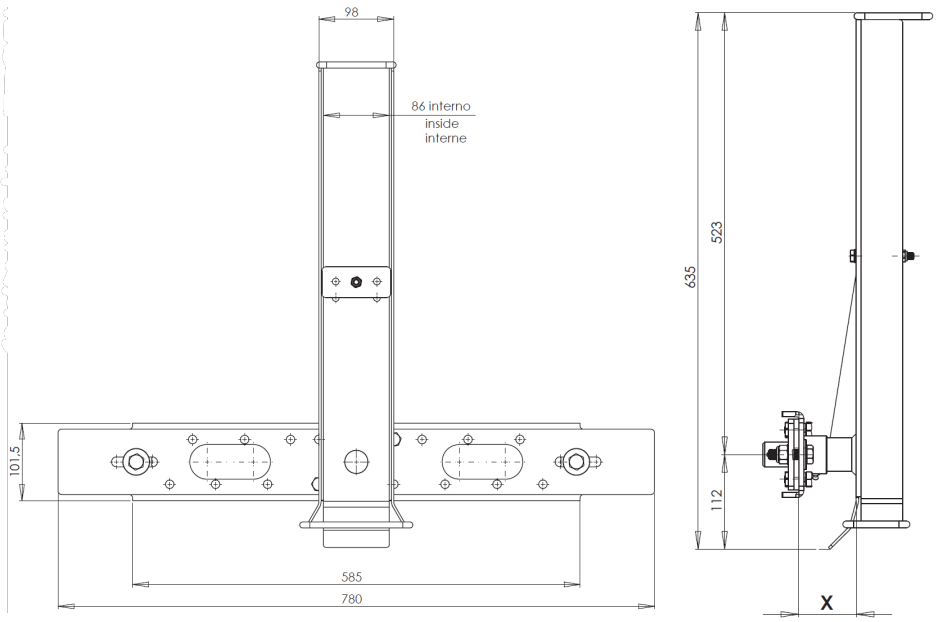

KIT **12201600209** (not included)

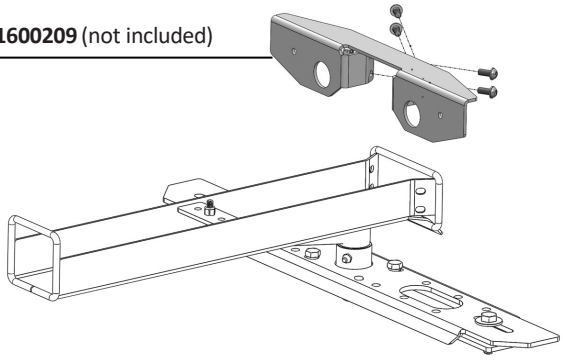

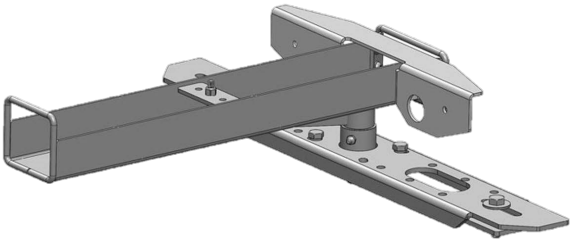

www.omfbpacific.com
OMFB Pacific Pty Ltd
Phone: +61 (0)3 9330 2694 Email: sales@omfbpacific.com

GENERAL ACCESSORIES
For Oil Tanks & Wet-Kits

This hose bracket kit includes everything you need for a secure and customized installation:

- Pre-drilled zinc plate – Shape it to fit your setup
- Extra-long 400mm bracket – For added flexibility
- PVC gasket & fixing collar – Protects the hose from wear and damage

Designed to keep your suction hose safe and prevent interference with moving parts, ensuring durability and reliability in demanding applications.

HOSE SUPPORT BRACKET KIT L 300 + 400mm	
Part Number	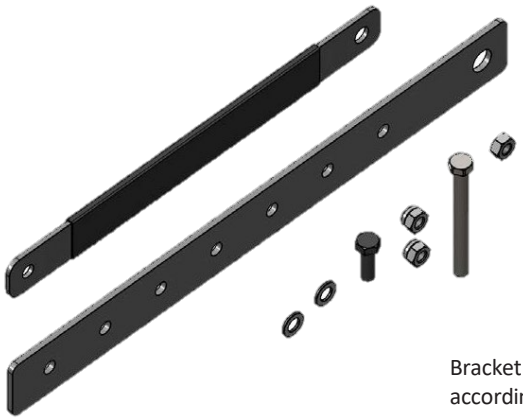 Bracket must be shaped and fixed according to the size of the hose
13590100273	

MOUNTING EXAMPLE:

The suction and return lines should be connected to the tank using flexible pipes specifically designed for this application. These pipes must be properly supported at intervals of approximately 400 to 500 mm to prevent excessive strain on the welded connection sleeves. Additionally, the pipe length should be carefully calculated to ensure optimal oil flow and minimize any extra stress on the tank.

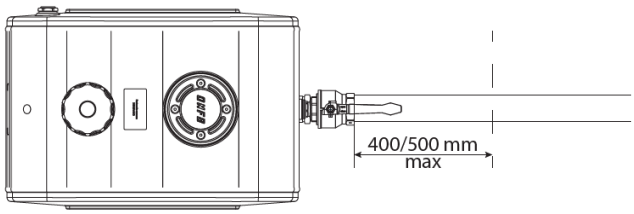

OMFB_Pacific_Oil_Tanks_&_Accessories_Range_REV6 27/02/2025